SMITH® JAY R. SMITH MFG. CO.®
MEMBER OF MORRIS GROUP INTERNATIONAL
POST OFFICE BOX 3237
MONTGOMERY, ALABAMA 36109-0237 (USA)
TEL: 334-277-8520 FAX: 888-377-7818 www.jrsmith.com

CUSTOMER DRIVEN SINCE 1926

MEMBER OF:

LOCATION

# SPECIAL PURPOSE DRAINS

## GUTTER DRAINS

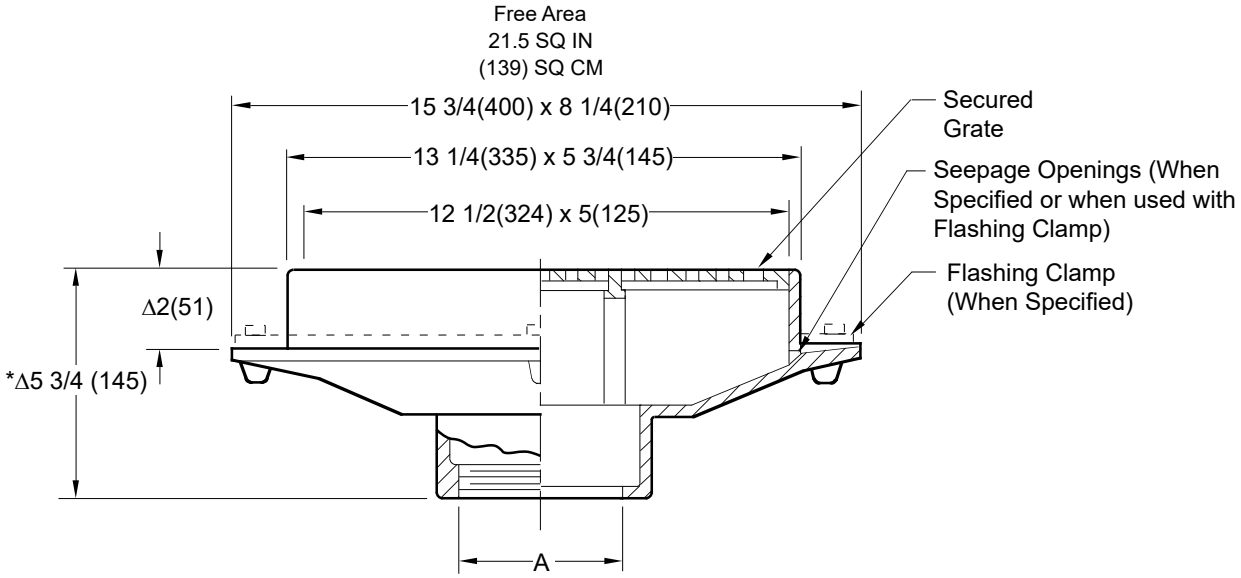


A (Pipe Size) = 02(50), 03(75), or 04(100)

- ☐ **Fig. 2585C . . . . CAULK OUTLET**
- ☐ **Fig. 2585T . . . . THREADED OUTLET**
- ☐ **Fig. 2585Y . . . . NO-HUB OUTLET**

Δ add 7/16"(11) when bronze top is specified.
*5"(125) for threaded outlet.

**REGULARLY FURNISHED:**
Duco Cast Iron Body with Secured ADA Grate.

**VARIATIONS:**
- ☐ Flashing Clamp -C
- ☐ Less Grate -LG
- ☐ Vandal Proof Grate -U
- ☐ Quad Close Trap Seal (Specify Fig. 2692)

**OPTIONAL MATERIALS:**
- ☐ Ductile Iron Grate -M
- ☐ Galvanized Cast Iron -G
- ☐ Nickel Bronze Top -NB
- ☐ Polished Bronze Top -PB

**NOTE:** Dimensions shown in parentheses are in millimeters.

| REV. | DATE | DESCRIPTION | BY | CKD. BY |
|---|---|---|---|---|
| H | 9-22-23 | Revised Fig Options/Variations | HS | CB |
| G | 8-10-23 | Removed Function | HS | CL |
| F | 1-23-23 | Added ADA | KK | JT |
| E | 7-8-15 | Revised Variations | TBW | CL |

WEIGHT POUNDS

VOLUME CUBIC FEET

FIGURE NUMBER **2585**

H | DRAWING NUMBER S2585 | SIZE A | SCALE: NONE | DATE: 5-17-85 | APPROVED BY: TD | CHECKED BY: TD | DRAWN BY: PJ | FIGURE NUMBER 2585

DIMENSIONS ARE SUBJECT TO MANUFACTURERS TOLERANCE AND CHANGE WITHOUT NOTICE
WE CAN ASSUME NO RESPONSIBILITY FOR USE OF SUPERSEDED OR VOID DATA

**WARNING:** Cancer and Reproductive Harm - www.P65Warnings.ca.gov