SMITH® JAY R. SMITH MFG. CO.®
MEMBER OF MORRIS GROUP INTERNATIONAL
POST OFFICE BOX 3237
MONTGOMERY, ALABAMA 36109-0237 (USA)
TEL: 334-277-8520 FAX: 888-377-7818 www.jrsmith.com

CUSTOMER DRIVEN SINCE 1926

MEMBER OF:

LOCATION

14 GAGE STAINLESS STEEL FLOOR, AREA & INDIRECT WASTE DRAINS WITH 12" (304) SQUARE TOP

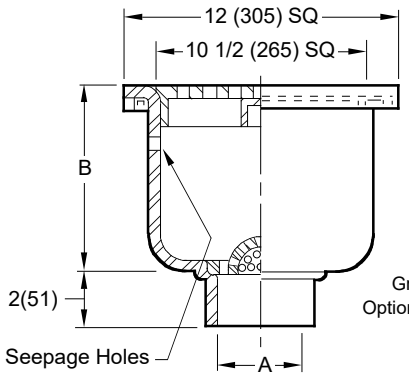

With Dome Bottom Strainer

USDA ACCEPTED

FIGURE NUMBERS

W/Dome Strainer	"B" Dim.	Approx. Wt. Lbs.	W/Sediment Bucket
9691	4 (100)	14	9696
9692	6 (150)	17	9697
9693	8 (205)	20	9698
9694	10 (255)	23	9699

Grates w/1/2"(13) holes - Free Area 34 SQ IN (219) SQ CM
Optional grates w/1/4"(6) holes - Free Area 18 SQ IN (116) SQ CM
A (Pipe Size) = 02(50), 03(75) or 04(100)
Y NO-HUB Outlet Regular

Schedule 40 Regularly Furnished

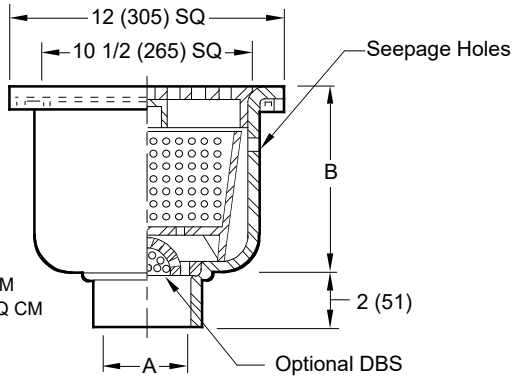

With Sediment Bucket

FEATURES, OPTIONS AND ORDERING INFORMATION

REGULARLY FURNISHED: 14 Gage Type 304 SS Receptor Body with "Seepage Control Holes", Cast Type 316 SS Ribbed Non-Tilt Loose Set Grate with 1/2"(13) Square Holes. Perforated SS Dome Bottom Strainer or Sediment Bucket as Indicated by Figure Number.

BUCKET MODELS ONLY:
- ☐ With SS Solid Bottom Ported Bucket -SBP
- ☐ With SS Dome Bottom Strainer -DBS
- ☐ With Mesh Lined Bucket -BS

VARIATIONS:
- ☐ Less Seepage Control Holes -LSH
- ● ☐ With Anchor Flange -F
- ● ☐ With Flange and Flashing Clamp -F-C
- ☐ Trap Primer Connection -P050 1/2"(13) & -P075 3/4"(19)
- ☐ BW Butt Weld Outlet (Specify Schedule -S05, -S10 or -S40)
- ☐ T Male Threaded Connection
- ☐ USDA Compliant

OPTIONAL MATERIALS:
- ☐ Fabricated from Type 316 Stainless Steel -316

NSF® UPC C ® File No. 3663
ASME A112.6.3 & CSA B79

NOTE:
When determining location of this drain, consideration must be given to traffic loading factors. When used in areas where the drain is subjected to any traffic loading heavier than pedestrian foot traffic, the location, load and description of load shall be submitted to Jay R. Smith's Sales Engineering Department for evaluation and selection of proper grate.

OPTIONAL TOP GRATES AND COVERS

Suffix	Description
☐ -10	Less SS Grate
☐ -12	With SS 1/2 Grate
☐ -13	With SS 3/4 Grate
☐ -14	With SS 2 1/2(64) Sq. Center Hole Grate
☐ -15	With SS Recessed Grate with Handle
☐ -21	With SS Grate with 4"(100) Dia. SS Funnel
☐ -22	With SS Grate with 6"(150) Dia. SS Funnel
☐ -25	With SS Grate with 8 1/4(210) x 3 1/4(53) x 4 1/2"(115) High Oval SS Funnel
☐ -26	With SS Grate with 6(150) x 2 1/2(64) x 1"(25) High Oval SS Funnel
☐ -41	With SS Solid Cover
☐ -42	With SS 1/2 Solid Cover
☐ -43	With SS 3/4 Solid Cover
☐ -44	With SS 2 1/2"(64) Sq. Center Hole Solid Cover
☐ -61	With SS Heel-Proof Ribbed Non-Tilt Loose Set Grate with 1/4"(6) Sq. Holes - Certified Light Duty
☐ -63	With SS Medium Duty Heel-Proof Ribbed Non-Tilt Loose Set Grate with 1/4"(6) Sq. Holes - Certified Medium Duty
☐ -64	With SS Heavy Duty Ribbed Non-Tilt Loose Set Grate with 1/2"(13) Sq. Holes
☐ -66	With SS Extra Heavy Duty Ribbed Non-Tilt Loose Set Grate with 1/2"(13) Sq. Holes - Certified Extra Heavy Duty

● Flange is located 2" (51) from top of drain. 3"(76) when specified.

NOTE: Dimensions shown in parentheses are in millimeters.

REV.	DATE	DESCRIPTION	BY	CKD. BY
AA	10-23-24	Removed "-69...."	HS	KV
Z	5-24-24	Revised Variations	HS	CL
Y	8-24-23	Removed Function	HS	CL
X	2-23-23	Added "®"	KK	CL

WEIGHT POUNDS | VOLUME CUBIC FEET

FIGURE NUMBER **9691 SERIES**

WARNING: Cancer and Reproductive Harm - www.P65Warnings.ca.gov

AA | DRAWING NUMBER S9691 | SIZE A | SCALE: NONE | DATE: 5-4-82 | APPROVED BY: J.M. | CHECKED BY: K.H. | DRAWN BY: C.R. | 9691 SERIES | FIGURE NUMBER

WE CAN ASSUME NO RESPONSIBILITY FOR USE OF SUPERSEDED OR VOID DATA
DIMENSIONS ARE SUBJECT TO MANUFACTURERS TOLERANCE AND CHANGE WITHOUT NOTICE