SMITH® JAY R. SMITH MFG. CO.®
MEMBER OF MORRIS GROUP INTERNATIONAL
POST OFFICE BOX 3237
MONTGOMERY, ALABAMA 36109-0237 (USA)
TEL: 334-277-8520 FAX: 888-377-7818 www.jrsmith.com
CUSTOMER DRIVEN SINCE 1926
MEMBER OF:

LOCATION

# FUNNELS

## DRIP AND CONDENSATE FUNNELS

Conforms to ASME A112.6.7/CSA B79.7

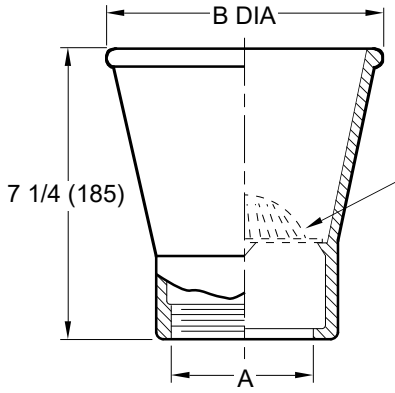


Dome Bottom Strainer
(When Specified)

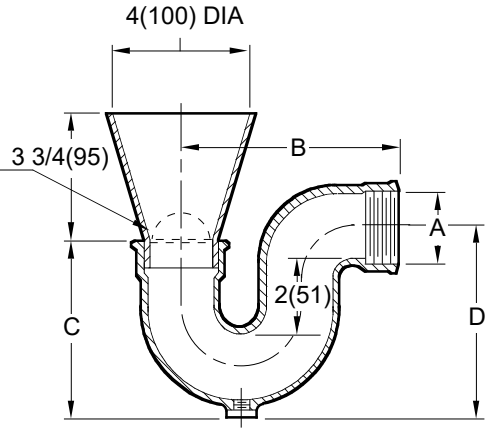


**CAULK OUTLET**

| A = PIPE SIZE | 02(50) | 03(75) | 04(100) | 06(150) |
|---|---|---|---|---|
| B | 6(150) | 7(180) | 8(205) | 10(255) |

**THREADED OUTLET ONLY**

| A = PIPE SIZE | B | C | D |
|---|---|---|---|
| 0150(40), 02(50) | 6(150) | 5(125) | 5 1/2(140) |
| 03(75) | 6(150) | 6(150) | 6(150) |

Fig. 3811C ..... CAST IRON WITH ACID RESISTANT COATED INTERIOR AND EXTERIOR ..... Fig. 3821T
Fig. 3812C ..... DUCO COATED CAST IRON ..... Fig. 3822T
Fig. 3813C ..... CAST BRONZE ..... Fig. 3823T
Fig. 3814C ..... POLISHED CHROME PLATED CAST BRONZE ..... Fig. 3824T

**REGULARLY FURNISHED:**
As described by Figure Number.

**NOTE:** Dimensions shown in parentheses are in millimeters.

**VARIATIONS:**
- ☐ Aluminum Dome Bottom Strainer -DBS
- ☐ Dome Bottom Strainer (Same finish and materials as described by Figure No.)
- ☐ Less Cleanout (Fig. 3820 Series only)
- ☐ With Front Cleanout (Fig. 3820 Series only)
- ☐ NO-HUB Adaptor 02(50), 03(75), 04(100) or 06"(150) sizes only (Specify Fig. 2646Y) (Fig.3821-3824 02(50) and 03(75) sizes only)
- ☐ T Threaded Outlet

**OPTIONAL MATERIALS:**
- ☐ All Galvanized -G

| REV. | DATE | DESCRIPTION | BY | CKD. BY |
|---|---|---|---|---|
| H | 9-18-24 | Revised Variations | HS | KV |
| G | 4-19-24 | Added ASME Note | HS | BW |
| F | 7-26-23 | Removed Function | HS | CL |
| E | 10-18-17 | Revised Desicription 3811/3821 | TBW | CR |

WEIGHT POUNDS

VOLUME CUBIC FEET

**FIGURE NUMBER**
**3811, 3812, 3813, 3814**
**3821, 3822, 3823, 3824**

H | DRAWING NUMBER S3811 | SIZE A | SCALE: NONE | DATE: 9-19-85 | APPROVED BY: SJM | CHECKED BY: JD | DRAWN BY: PJ | FIGURE NUMBER 3811, 3812, 3813, 3814 3821, 3822, 3823, 3824

DIMENSIONS ARE SUBJECT TO MANUFACTURERS TOLERANCE AND CHANGE WITHOUT NOTICE
WE CAN ASSUME NO RESPONSIBILITY FOR USE OF SUPERSEDED OR VOID DATA

**WARNING:** Cancer and Reproductive Harm - www.P65Warnings.ca.gov