SMITH® JAY R. SMITH MFG. CO.®
MEMBER OF MORRIS GROUP INTERNATIONAL
POST OFFICE BOX 3237
MONTGOMERY, ALABAMA 36109-0237 (USA)
TEL: 334-277-8520 FAX: 888-377-7818 www.jrsmith.com
CUSTOMER DRIVEN SINCE 1926
MEMBER OF:

LOCATION

ADJUSTABLE FIXTURE SUPPORTS

SHALLOW ROUGH-IN TYPE FOR BLOWOUT WATER CLOSETS

NO-HUB VERTICAL FITTING

SINGLE

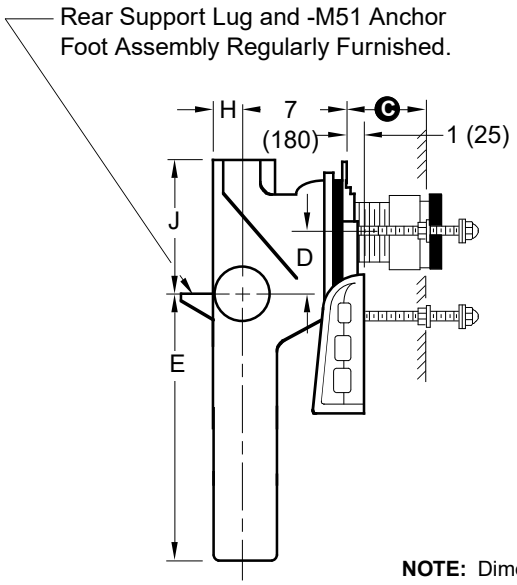

Fig. 0330Y Side View

DOUBLE

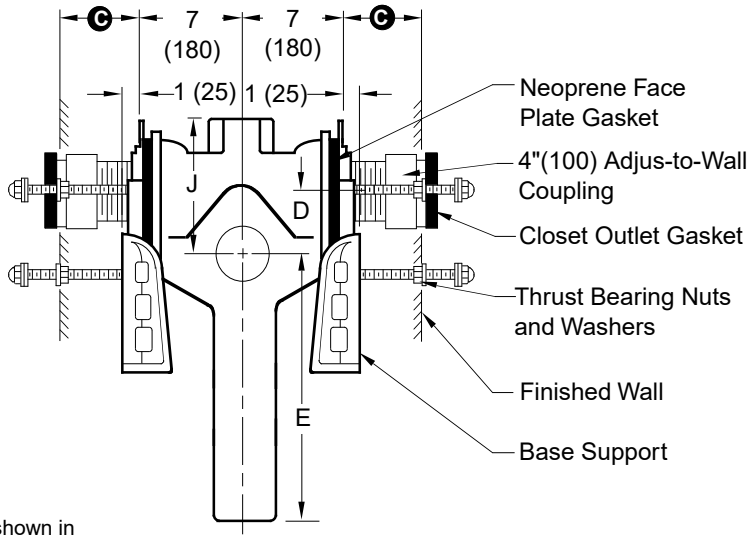

Fig. 0330DY Side View

NOTE: Dimensions shown in parentheses are in millimeters.

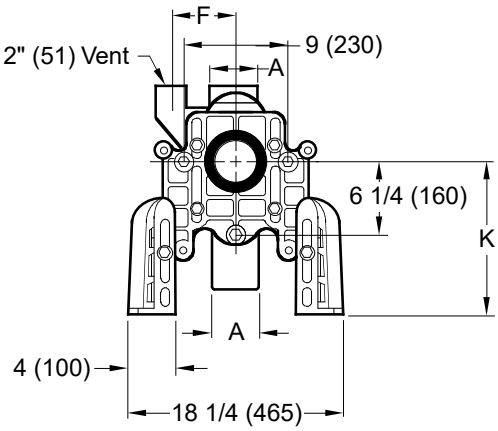

BLOWOUT Front View

Fig. 0330Y . . . . NO-HUB
Fig. 0330DY . . .NO-HUB DOUBLE

NOTE: Base support must be securely anchored to floor with four 1/2" (13) bolts provided by contractor.
NOTE: 1 1/2" (38) or 2" (51) tapped inlet available. Add suffix -N.
NOTE: When used with concealed flush valve locate face plate behind supply pipe.
NOTE: See opposite side for C dimension and optional outlet connections.

The water closet gasket regularly furnished is made of molded neoprene and designed to fit water closet outlet dimensions and configurations shown in ANSI Standard A112.19.2M-1982, Figure 13B. If gasket is not found to be compatible to fixture due to nonconformance of said fixture to ANSI A112.19.2M, then fixture manufacturer shall be consulted for a suitable gasket recommendation. Jay R. Smith assumes no liability for connections to fixtures which do not conform to these standards.

A SIZE	D BLOWOUT MIN	D BLOWOUT MAX	E	F	H	J	K BLOWOUT MIN	K BLOWOUT MAX
4 (100)	2 3/4 (70)	5 1/2 (140)	10 (255)	5 1/4 (135)	3 (76)	9 (230)	10 3/4 (275)	15 3/4 (400)
5 (125)	2 7/8 (73)	5 3/4 (145)	11 1/2 (290)	6 1/4 (160)	3 1/2 (89)	11 1/2 (290)	10 3/4 (275)	15 3/4 (400)
6 (150)	2 3/4 (70)	5 1/2 (145)	11 1/2 (290)	6 1/4 (160)	4 (100)	11 1/2 (290)	10 3/4 (275)	15 3/4 (400)

Conforms to ASME A112.6.1M

REV.	DATE	DESCRIPTION	BY	CKD. BY
C	4-16-24	Added ASME Note	HS	JT
B	1-30-98	Added Millimeters	EMB	BS
A	4-22-94	Submittal Update	EMB	BS

WEIGHT POUNDS

VOLUME CUBIC FEET

FIGURE NUMBER **0330Y**

WE CAN ASSUME NO RESPONSIBILITY FOR USE OF SUPERSEDED OR VOID DATA
DIMENSIONS ARE SUBJECT TO MANUFACTURERS TOLERANCE AND CHANGE WITHOUT NOTICE

DRAWING NUMBER S0330Y | SIZE A | SCALE: NONE | DATE: 12-19-89 | APPROVED BY: McD | CHECKED BY: JM | DRAWN BY: EMB | FIGURE NUMBER 0330Y | C

WARNING: Cancer and Reproductive Harm - www.P65Warnings.ca.gov